PP SERIES

DC/DC Single & Dual Output: 1.5 - 25 Watts

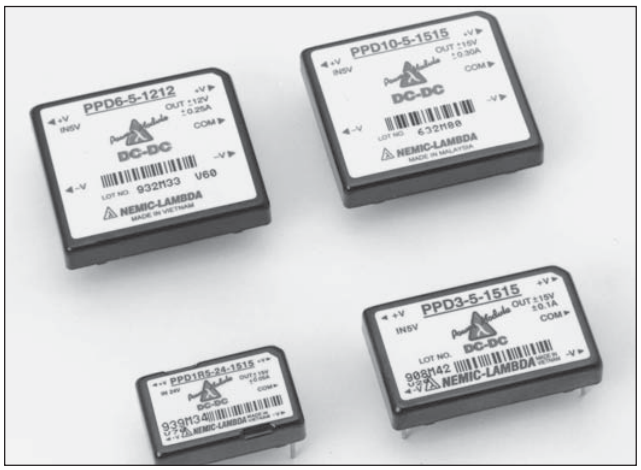

Features

- Choice of 94 models
- 5V, 12V, 24V and 48VDC input options
- Single and dual output models
- Fully isolated floating output
- PCB mounting low profile modules
- Chassis mount options
- Constant current limiting overload
- Voltage trim for 15 and 25 watt models
- Remote control for 15 and 25 watt models
- Proven field reliability and performance
- DIN rail mounting options, consult office
- Wide input voltage range
- High operating temperature +71°C

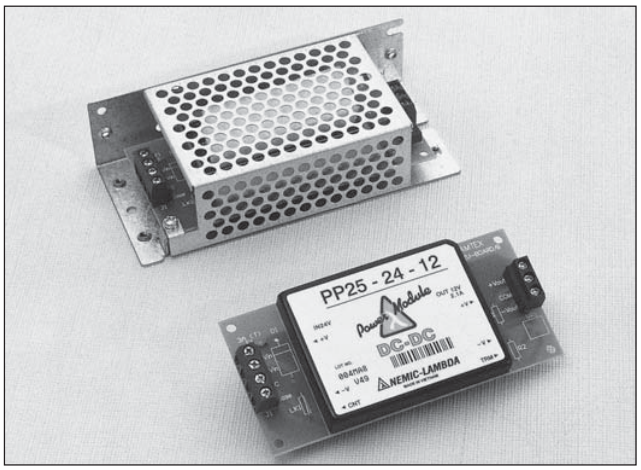

Specifications

INPUT VOLTAGE: (1.5~10.0W)	5VDC: (4.5~7.2) 12VDC: (8~16.5) 24VDC: (18~32) 48VDC: (32~63)
INPUT VOLTAGE: (15~25W)	5VDC: (4.7~7.2) 12VDC: (9~18) 24VDC: (18~36) 48VDC: (36~72)
INPUT CURRENT: (15~25W)	Model dependent, consult office for specifications
EFFICIENCY:	Model dependent, typically 70~84%
OUTPUT V/A:	Refer to table
OUTPUT V. ADJUSTMENT:	V out is fixed for 1.5 - 10W models. ±5% adjustment model 15 - 25W only via external resistor network
OUTPUT POWER:	Single output: 1.5 - 25 watts Dual output: 1.5 - 10 watts
LOAD REGULATION:	Typically ±0.6%
LINE REGULATION:	Typically ±0.4%
OUTPUT RIPPLE:	120mV for 5V output models 150mV for other output voltages
OVP:	15 - 25W models only, set at 115 - 140% of nominal V out
OVERLOAD PROTECTION:	Constant current limiting
TEMP. CO-EFFICIENT:	0.03% per °C
PARALLEL OPERATION:	No
SERIES OPERATION:	Yes
OPERATING TEMPERATURE:	-20°C to +71°C at rated input and load. Derate from +55°C @ 0.6W per°C
STORAGE TEMPERATURE:	-40°C to +85°C
ISOLATION VOLTAGE:	Input - output: 500VDC Output - case: 500VDC
SWITCH FREQUENCY:	330KHz 1.5W and 3W models 400KHz 6W and 25W models
REMOTE CONTROL:	15 and 25W models only

DIMENSIONS & WEIGHT:

		W x H x L	
PP1R5:	1.5W	33 x 8 x 21mm	15g
PP3:	3W	47 x 8 x 28mm	25g
PP6:	6W	47 x 8 x 42mm	40g
PP10:	10W	47 x 8 x 42mm	40g
PP15:	15W	48 x 8 x 50mm	65g
PP25:	25W	65 x 8 x 50mm	65g

CONNECTIONS: PCB mounting

Chassis/Panel Mount Type Option:

All of the PCB mounting modules can be supplied in a package suitable for panel mounting. The connections are then offered on screw terminals.

PP SERIES

DC/DC Single Output: 1.5 - 25 Watts

MODEL	Input	Output V	Output A	Power W
PP1R5 - 5 - 5	5V	5V	0.3A	1.5W
PP1R5 - 5 - 12	5V	12V	0.12A	1.5W
PP1R5 - 5 - 15	5V	15V	0.1A	1.5W
PP1R5 - 12 - 5	12V	5V	0.3A	1.5W
PP1R5 - 12 - 12	12V	12V	0.12A	1.5W
PP1R5 - 12 - 15	12V	15V	0.1A	1.5W
PP1R5 - 24 - 5	24V	5V	0.3A	1.5W
PP1R5 - 24 - 12	24V	12V	0.12A	1.5W
PP1R5 - 24 - 15	24V	15V	0.1A	1.5W
PP1R5 - 48 - 5	48V	5V	0.3A	1.5W
PP1R5 - 48 - 12	48V	12V	0.12A	1.5W
PP1R5 - 48 - 15	48V	15V	0.1A	1.5W
PP3 - 5 - 5	5V	5V	0.6A	3W
PP3 - 5 - 12	5V	12V	0.24A	3W
PP3 - 5 - 15	5V	15V	0.2A	3W
PP3 - 12 - 5	12V	5V	0.6A	3W
PP3 - 12 - 12	12V	12V	0.24A	3W
PP3 - 12 - 15	12V	15V	0.2A	3W
PP3 - 24 - 5	24V	5V	0.6A	3W
PP3 - 24 - 12	24V	12V	0.24A	3W
PP3 - 24 - 15	24V	15V	0.2A	3W
PP3 - 48 - 5	48V	5V	0.6A	3W
PP3 - 48 - 12	48V	12V	0.24A	3W
PP3 - 48 - 15	48V	15V	0.2A	3W
PP6 - 5 - 5	5V	5V	1.2A	6W
PP6 - 5 - 12	5V	12V	0.5A	6W
PP6 - 5 - 15	5V	15V	0.4A	6W
PP6 - 12 - 5	12V	5V	1.2A	6W
PP6 - 12 - 12	12V	12V	0.5A	6W
PP6 - 12 - 15	12V	15V	0.4A	6W
PP6 - 24 - 5	24V	5V	1.2A	6W
PP6 - 24 - 12	24V	12V	0.5A	6W
PP6 - 24 - 15	24V	15V	0.4A	6W
PP6 - 48 - 5	48V	5V	1.2A	6W
PP6 - 48 - 12	48V	12V	0.5A	6W
PP6 - 48 - 15	48V	15V	0.4A	6W
PP10 - 5 - 5	5V	5V	1.6A	8W
PP10 - 5 - 12	5V	12V	0.7A	8W
PP10 - 5 - 15	5V	15V	0.6A	9W
PP10 - 12 - 5	12V	5V	2.0A	10W
PP10 - 12 - 12	12V	12V	0.9A	10W
PP10 - 12 - 15	12V	15V	0.7A	10W
PP10 - 24 - 5	24V	5V	2.0A	10W
PP10 - 24 - 12	24V	12V	0.9A	10W
PP10 - 24 - 15	24V	15V	0.7A	10W
PP10 - 48 - 5	48V	5V	2.0A	10W
PP10 - 48 - 12	48V	12V	0.9A	10W
PP10 - 48 - 15	48V	15V	0.7A	10W
PP15 - 12 - 5	12V	5V	2.4A	12W
PP15 - 12 - 12	12V	12V	1.3A	15W
PP15 - 12 - 15	12V	15V	1.0A	15W
PP15 - 24 - 5	24V	5V	2.4A	15W
PP15 - 24 - 12	24V	12V	1.3A	15W
PP15 - 24 - 15	24V	15V	1.0A	15W
PP15 - 48 - 5	48V	5V	2.4A	15W
PP15 - 48 - 12	48V	12V	1.3A	15W
PP15 - 48 - 15	48V	15V	1.0A	15W
PP25 - 5 - 3.3	5V	3.3V	3.0A	9.9W
PP25 - 5 - 5.2	5V	5.2V	2.9A	15W
PP25 - 12 - 5	12V	5V	4.0A	25W
PP25 - 12 - 12	12V	12V	2.1A	25W
PP25 - 12 - 15	12V	15V	1.7A	25W
PP25 - 24 - 5	24V	5V	4.0A	25W
PP25 - 24 - 12	24V	12V	2.1A	25W
PP25 - 24 - 15	24V	15V	1.7A	25W
PP25 - 48 - 5	48V	5V	4.0A	25W
PP25 - 48 - 12	48V	12V	2.1A	25W
PP25 - 48 - 15	48V	15V	1.7A	25W

DC/DC Dual Output: 1.5 - 10 Watts

MODEL	Input	Output V	Output A	Power W
PPD1R5 - 5 - 1212	5V	±12V	0.06A	1.5W
PPD1R5 - 5 - 1515	5V	±15V	0.05A	1.5W
PPD1R5 - 12 - 1212	12V	±12V	0.06A	1.5W
PPD1R5 - 12 - 1515	12V	±15V	0.05A	1.5W
PPD1R5 - 24 - 1212	24V	±12V	0.06A	1.5W
PPD1R5 - 24 - 1515	24V	±15V	0.05A	1.5W
PPD1R5 - 48 - 1212	48V	±12V	0.06A	1.5W
PPD1R5 - 48 - 1515	48V	±15V	0.05A	1.5W
PPD3 - 5 - 1212	5V	±12V	0.12A	3W
PPD3 - 5 - 1515	5V	±15V	0.1A	3W
PPD3 - 12 - 1212	12V	±12V	0.12A	3W
PPD3 - 12 - 1515	12V	±15V	0.1A	3W
PPD3 - 24 - 1212	24V	±12V	0.12A	3W
PPD3 - 24 - 1515	24V	±15V	0.1A	3W
PPD3 - 48 - 1212	48V	±12V	0.12A	3W
PPD3 - 48 - 1515	48V	±15V	0.1A	3W
PPD6 - 5 - 1212	5V	±12V	0.25A	6W
PPD6 - 5 - 1515	5V	±15V	0.2A	6W
PPD6 - 12 - 1212	12V	±12V	0.25A	6W
PPD6 - 12 - 1515	12V	±15V	0.2A	6W
PPD6 - 24 - 1212	24V	±12V	0.25A	6W
PPD6 - 24 - 1515	24V	±15V	0.2A	6W
PPD6 - 48 - 1212	48V	±12V	0.25A	6W
PPD6 - 48 - 1515	48V	±15V	0.2A	6W
PPD10 - 5 - 1212	5V	±12V	0.35A	8W
PPD10 - 5 - 1515	5V	±15V	0.30A	9W
PPD10 - 12 - 1212	12V	±12V	0.45A	10W
PPD10 - 12 - 1515	12V	±15V	0.35A	10W
PPD10 - 24 - 1212	24V	±12V	0.45A	10W
PPD10 - 24 - 1515	24V	±15V	0.35A	10W
PPD10 - 48 - 1212	48V	±12V	0.45A	10W
PPD10 - 48 - 1515	48V	±15V	0.35A	10W

PP SERIES

DC/DC Single & Dual Output: 1.5 - 25 Watts

PP1R5

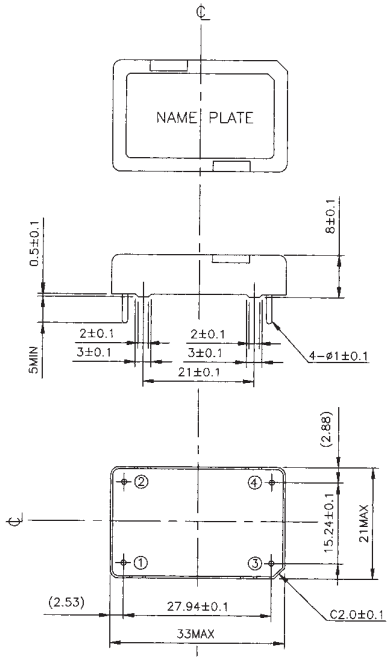

Terminal assignments
① +V INPUT
② −V
③ +V OUTPUT
④ −V
Case: Copper (Thickness 0.4mm)
Weight: 15g

PP3

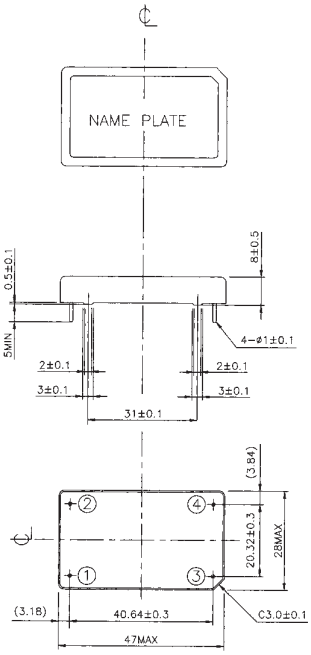

Terminal assignments
① +V INPUT
② −V
③ +V OUTPUT
④ −V
Case: Copper (Thickness 0.4mm)
Weight: 25g

PP6

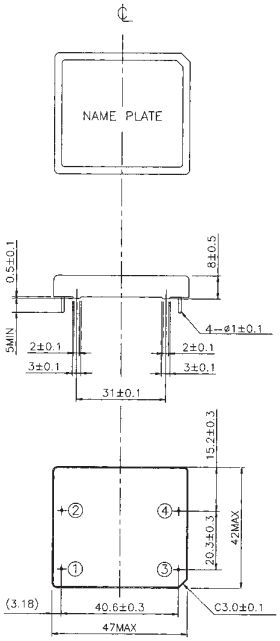

Terminal assignments
① +V INPUT
② −V
③ +V OUTPUT
④ −V
Case: Copper (Thickness 0.4mm)
Weight: 40g

PP10

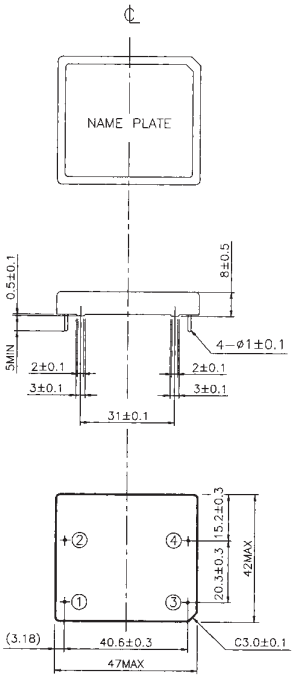

Terminal assignments
① +V INPUT
② −V
③ +V OUTPUT
④ −V
Case: Copper (Thickness 0.4mm)
Weight: 40g

PP15

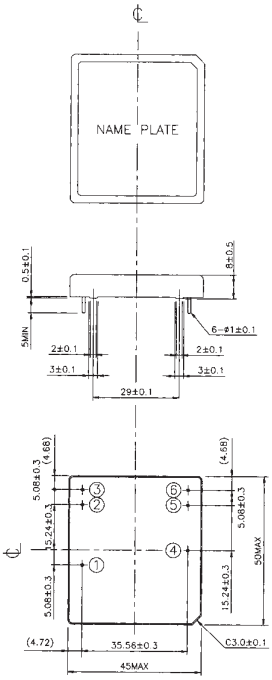

Terminal assignments
① +V INPUT
② −V
③ CNT
④ +V OUTPUT
⑤ −V
⑥ TRM
Case: Copper (Thickness 0.4mm)
Weight: 55g

PP25

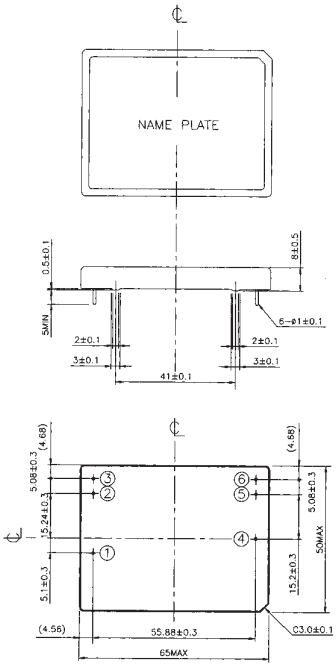

Terminal assignments
① +V INPUT
② −V
③ CNT
④ +V OUTPUT
⑤ −V
⑥ TRM
Case: Copper (Thickness 0.4mm)
Weight: 65g

PP SERIES

DC/DC Single & Dual Output: 1.5 - 25 Watts

PPD1R5

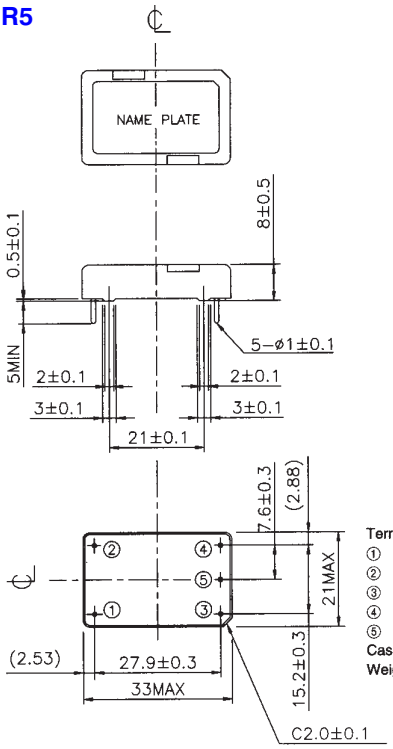

Terminal assignments
① +V INPUT
② −V
③ +V OUTPUT
④ −V
⑤ COM
Case: Copper (t = 0.4 mm)
Weight: 15g

PPD3

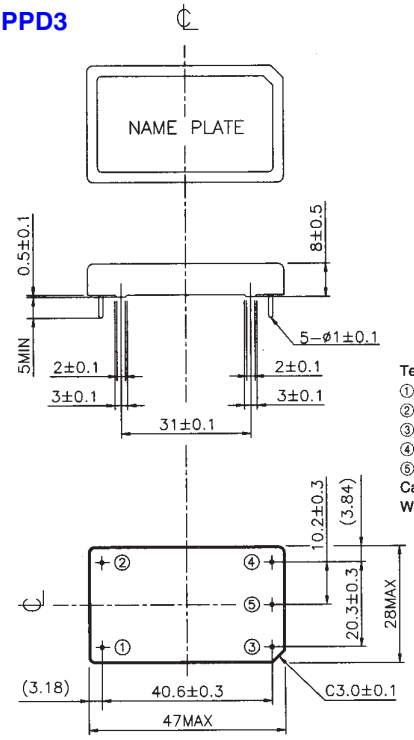

Terminal assignments
① +V INPUT
② −V
③ +V OUTPUT
④ −V
⑤ COM
Case: Copper (t = 0.4 mm)
Weight: 25g

PPD6

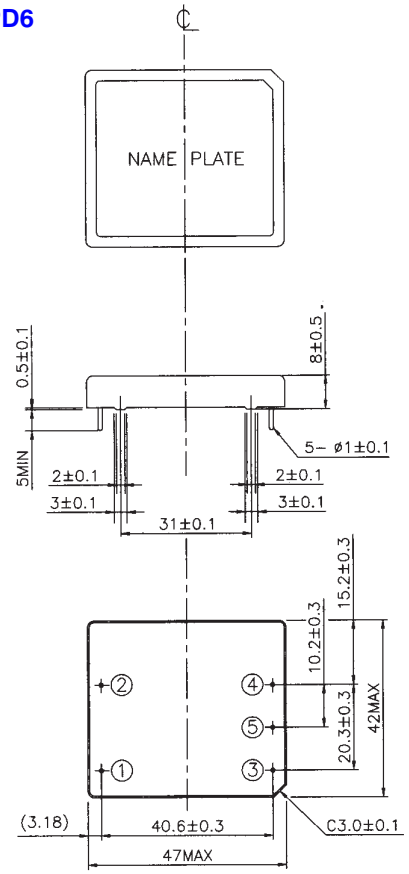

Terminal assignments
① +V INPUT
② −V
③ +V OUTPUT
④ −V
⑤ COM
Case: Copper (t = 0.4 mm)
Weight: 40g

PPD10

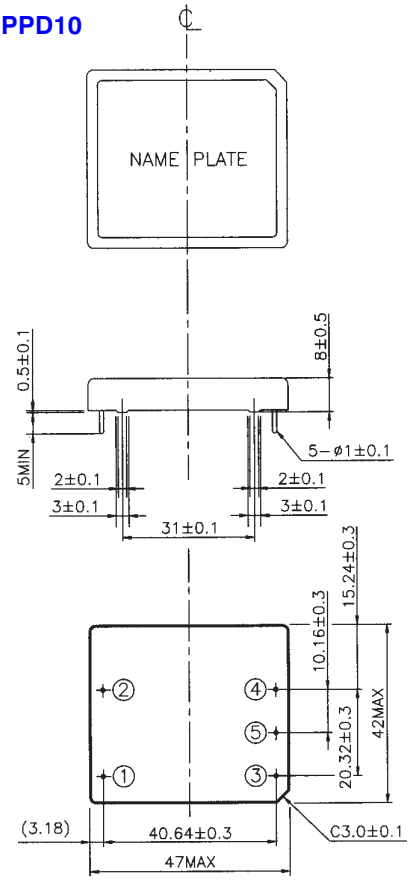

Terminal assignments
① +V INPUT
② −V
③ +V OUTPUT
④ −V
⑤ COM
Case: Copper (t = 0.4 mm)
Weight: 40g

(Unit: mm)