# SR-U Series

*Smart DC UPS , 750W , 500W , 250W*
*12V , 24V , 36V , 48V*

- Constant monitoring of battery circuit integrity
- Deep discharge protection
- Controls load and charge current independently
- Overload, short circuit & reverse polarity protect
- Automatic battery temperature compensation
- High efficiency switch mode design
- No transition switching between PSU & backup battery
- LED flash codes for precise state indication
- Two alarm relay outputs standard
- Suitable for use with all types of lead acid batteries (batteries external to power supply)
- Optional periodic battery testing.

**SPECIFICATIONS** **All specifications are typical at nominal input, full load and at 20°C unless otherwise stated.**

## SMART DC UPS: SYSTEM DESCRIPTION AND FEATURES

A Smart DC UPS system consists of the DC power supply, together with backup battery which is usually installed as the last line of defence in the event of loss of mains power.

The system incorporates common sense features providing a vastly improved solution over the traditional methods of float charger plus battery. The battery is accurately charge current limited and you cannot overload the charger or over-heat the battery.

The Smart DC UPS is the ideal solution for: 1-Critical systems from 250W to 750+ W , 2- Applications having stand-ing load with back up standby battery installed , 3- Systems which require no transition from mains to battery backup 4– Emergency lighting systems. 4-Scada systems with automatic battery mointoring. And testing.

**Our Smart DC UPS systems** ensure maximum uptime of the system, and life of the battery, by providing:

- Independent battery charge current limit
- Monitoring of the battery status and availability at all times
- Independently limiting the charge current to the battery, thus ensuring load receives priority (most units can have load : charge ratio altered to suit battery size).
- Protecting against overload, short circuit and reverse polarity connection, incorporating ELCB (electronic circuit breaker , series III only)
- Deep discharge protection by disconnecting at low battery voltage.
- Temperature compensation of battery charge voltage - essential for battery health where ambient temperatures fluctuate.
- Alarm contacts to enable interfacing with monitoring equipment such as PLCs, SCADA, security, telemetry and myriad others - standard alarms are Power OK and Battery System OK.
- Optionally, performing regular battery condition testing at a predetermined interval and providing an alarm in the event the battery is suspect.

All of the features can be customized to a particular application, additionally we offer a range of packaging options to provide utmost flexibility:

- All of our standard enclosures enable installation in any normal location without safety concerns.
- Rack mounting to standard 19" enclosures
- Wall mounting with battery accommodation to house complete system including batteries

SNAPTEC
www.snaptec.com.au

# SR-U Series

*Smart DC UPS , 750W , 500W , 250W*
*12V , 24V , 36V , 48V*

## ELECTRICAL

| | |
|---|---|
| **Input** | 180V-264VAC 45-65Hz or 200 - 375V DC (standard) , 88V-132VAC 45-65Hz or 110-180VDC (Upon Request ) |
| **Fusing / Protection** | Internal AC input fuse, output battery fuse |
| **Isolation** | 3.5KVAC 1 min. input / output, 1KV DC input / earth |
| **Efficiency** | ≥ 85% |
| **Inrush current** | Soft start circuit |
| **Output Power** | 250W, 500W, 750W continuous (0 - 50°C) |
| **Output Voltages** | 13.8V, 27.6V, 41.4V, 55.2V Other voltages by request. |
| **Voltage adj. range** | 85 - 105% of Vout |
| **Temp. Compensation** | Temperature sensor on 1.7m lead with adhesive pad: -4mV / °C / cell ±10% |
| **Current Limit** | Straight line profile |
| **Line Regulation** | <0.2% over AC input range |
| **Load Regulation** | <0.4% open circuit to 100% load |
| **Noise** | <1% |
| **Drift** | 0.03% / °C |
| **Hold-up time** | 15 - 20 ms (nom. - max. Vin) without battery |
| **Thermal Protection** | Automatic current reduction if >50°C. Self-resetting |
| **Overvoltage Protection** | Over-voltage protection on output at ~ 130% of nominal output voltage |
| **Battery Overcurrent Protection** | Electronic circuit breaker (ELCB) allows max. battery current of 1.5x $I_{PSU}$ continuous and trips when $I_{load}$ > 6 x $I_{PSU}$ |
| **EMI** | to CISPR 22 / EN55022 class A |
| **Safety** | to IEC950 / EN60950 / AS/NZS3260 |

## ENVIRONMENTAL AND PHYSICAL

| | |
|---|---|
| **Operating temperature** | 0 - 50 °C ambient at full load<br>De-rate linearly >50 °C to 0 load @ 70 °C |
| **Storage temperature** | -10 to 85 °C ambient |
| **Humidity** | 0 - 95% relative humidity non-condensing |
| **Cooling -SR250** | Natural Convection except for 12V model which is Fan forced cooled |
| **Cooling -SR500 SR750** | Fan Forced using magnetic levitation fan |
| **AC Input connector** | IEC320 inlet socket (similar to PCs etc.) |
| **DC Output Connections** | M8 brass stud: or *'Phoenix combicon'* plug-in style socket & mating screw terminal block: (max. wire 4mm² / way) |
| **Alarm Connections** | Plug in screw terminal block (max. 2.5mm²) |
| **Enclosure** | Powder coated aluminium |
| **Indicators** | **Green LEDs:** Power OK, Battery system OK<br>**Red LED:** Standby |

## SMART DC UPS FEATURES

| | |
|---|---|
| **Battery Charge Current Limit** | See Model Table for default settings. Charge current may be set to a max. of $I_{PSU}$ - $I_{LA}$ where $I_{LA}$ is actual load current |
| **Reverse Polarity** | Battery reverse connection will open internal fuse (and produce alarm) |
| **Battery Monitoring** | Detects for presence of battery after 1 minute on start up, then every 60 minutes when charge current < 200mA |
| **ELCB** | Electronic Circuit Breaker operates under the following conditions: |
| ***- battery discharged*** | ELVD (electronic low voltage disconnect) activates when battery voltage drops to 1.67V/cell (adjustable) - auto reset |
| ***- overload*** | Allows ~150% load from battery without acting, |
| ***- short circuit*** | Operates within 300ms for total load > 600% Acts within 2ms, backed up by fuse |
| **Indication LEDs** | Battery System OK, Power OK, Standby |
| **Alarms** | • Power OK (Mains/PSU fail, standby mode)<br>• Battery System OK - alarms when battery voltage low (on mains fail) , battery missing, battery circuit wiring faulty, BCT fail |
| • **Relay contacts** | C - NO - NC full changeover rated 1A /50V DC, 32VAC |
| **Standby Mode** | Turns off DC output of PSU & allows load to run off battery |
| **LED Codes** | Refer to next page for full list of flash codes indicating operating or fault conditions |
| **ACCESSORIES SUPPLIED** | Mounting Feet together with screws<br>AC power cord Standard 1.5m lead with IEC320 socket / local plug<br>*'Phoenix combicon'* DC connector for 'X' version (max. wire 4mm²)<br>Mating screw-terminal plug for alarm outputs (max. wire 2.5mm²)<br>Crimp lugs for stud terminal versions |

## ADDITIONAL OPTIONS

| | |
|---|---|
| **19"Rack Mount** | 2RU or 3RU 19" Rack Mount Enclosure |
| **Wall Mount Enclosure** | Enclosed Wall Mount cabinet with room for batteries, with MCBs and terminals. |
| **Temperature Probe** | To provide battery voltage temperature compensation |
| **METER** | Digital voltage and current meter available only the 19" rack mount enclosures and the wall mount enclosure |
| **Parallel redundancy** | Use external output diode: Diode can be fitted when ordering 19" rack mount option |
| **Battery Condition Test (BCT)** | Available as an option, please specify duration & frequency (factory default 1hour every 23 hours if enabled) Relay output provided for indication or to control external load. |
| **DC Input** | Available on request but has output fuse for short circuit protection , Voltage ranges: 110-180VDC , 200-375VDC |

## MODEL TYPES

| | DC Output | | | |
|---|---|---|---|---|
| MODELS | Output Voltage (Load/Charger) | Max. Recomm.* Load Current ($I_{LOAD}$) | Charge Current Limit (minimum) | PSU Rated Current ($I_{PSU}$) |
| SR750-U-12 | 13.8V | 42.0A | 12.0A | 54.0A |
| SR700-U-24 | 27.6V | 19.0A | 8.0A | 27.0A |
| SR700-U-36 | 41.4V | 12.0A | 6.0A | 18.0A |
| SR750-U-48 | 55.2V | 8.5A | 5.0A | 13.5A |
| SR500-U-12 | 13.8V | 27.0A | 9.0A | 36.0A |
| SR500-U-24 | 27.6V | 12.0A | 6.0A | 18.0A |
| SR500-U-36 | 41.4V | 7.0A | 5.0A | 12.0A |
| SR500-U-48 | 55.2V | 5.0A | 4.0A | 9.0A |
| SR250-U-12 | 13.8V | 12.0A | 6.0A | 18.0A |
| SR250-U-24 | 27.6V | 5.0A | 4.0A | 9.0A |
| SR250-U-36 | 41.4V | 3.0A | 3.0A | 6.0A |
| SR250-U-48 | 55.2V | 2.0A | 2.5A | 4.5A |

* to allow for adequate charging current as load take precedent over charging of battery , The charge current limit can be increased depending on the application.

## MODEL PART NUMBER CODES

**SRPPP-F-VVV-C-D-E-O-XXXX**

**SR:** SERIES NAME

**PPP:** Output Power Level in watts: 250W , 500W , 750W

**F:** Function:

- U = Smart DC UPS System
- P = Standard power supply for float Battery charger
- B = Automatic Battery Charger with boost and float functions

**VVV**: DC Output voltage: 12V , 24V , 36V , 48V

**C:** Output Connector type: X = Phoenix plug in connector  S = Stud terminals

**D:** Case Style:

- CM = Chassis Mount
- RM2 : 2U high Rack Mount
- RM3 : 3U high Rack Mount
- WM : Wall Mount

**E**: Input voltage: L=230VAC , G=110VAC , J=110VDC

**O**: OPTIONS:

- T = Temperature Compensation
- BCT = Battery Condition Testing
- AL = Alarms (AC Fail , Battery Low)
- MET = Digital Voltage and Current Meter ( Available on 19" rack mount and wall mount units )
- D = Parallel redundancy diode

**XXXX:** Special code for specific models

## ALARM AND INDICATOR CONDITIONS ON THE SRx-U

**Please note that the last four conditions apply only if the battery condition test option is enabled.**

| Battery System OK LED | Power OK LED | Power Stand-by LED | Power OK Alarm | Battery System OK Alarm | Condition |
|---|---|---|---|---|---|
| ☀ | ☀ | ○ | Normal | Normal | **System normal**: AC power is on, PSU output is OK, battery circuit is OK and battery voltage is > V Battery Low. |
| ◐ | ☀ | ○ | Normal | Normal | **Battery Detection test in progress / imminent** (LED begins flashing 10 sec. prior to test of < 1 sec). |
| ○ | ☀ | ○ | Normal | Alarm | System AC power is on, PSU output is OK but either:<br>1. Internal battery fuse has opened (only if battery has been reverse polarity connected), ***or***<br>2. Battery circuit open - battery missing, or fuse / circuit breaker / wiring fault. |
| ☀ | ○ | ○ | Alarm | Normal | Either:<br>1. AC power has failed, ***or***<br>2. PSU has failed |
| ◐ | ○ | ○ | Alarm | Alarm | AC Power is off / DC has failed **and** battery has discharged to ≤ V Battery Low, unit will continue delivering battery current until low level initiates ELVD. |
| ○ | ○ | ○ | Alarm | Alarm | AC Power is off / DC has failed **and** ELVD has activated and disconnected battery from load. Residual current drain on battery following ELVD <1 mA. |
| ☀ | ○ | ☀ | Alarm | Normal | System is in STANDBY mode due to :<br>*1.* Operator pressed standby button, ***or***<br>2. PSU has internal fault |
| ◐ | ○ | ☀ | Alarm | Alarm | PSU is in standby **and** battery has discharged to ≤ Battery Low, unit will continue delivering battery current until next level initiates ELVD. |
| ○ | ○ | ☀ | Alarm | Alarm | PSU is in standby **and** ELVD has activated and disconnected battery from load. Residual current drain on battery following ELVD < 1mA |
| ◐ | ◐ | ○ | Normal | Normal | Battery Condition Test is in progress: LEDs flash alternately |
| * ◐ | ☀ | ○ | Normal | Alarm | **Battery Condition Unserviceable:** failed to maintain terminal voltage during battery condition test |
| * ◐ | ☀ | ○ | Alarm | Alarm | **Battery Condition Unserviceable:** failed to maintain terminal voltage during battery condition test **and** System AC power or PSU has failed |
| * ◐ | ○ | ☀ | Alarm | Alarm | PSU is in standby mode **and** battery condition is determined as unserviceable: failed to maintain terminal voltage during battery condition test |

**LEGEND :** ○ =Off ◐ =Flashing * ☀ =On ◐ =Flashing Slowly

## ELECTRONIC CIRCUIT BREAKER (ELCB) (CHARACTERISTICS CHART AS IMPLEMENTED IN THE SRx-U)

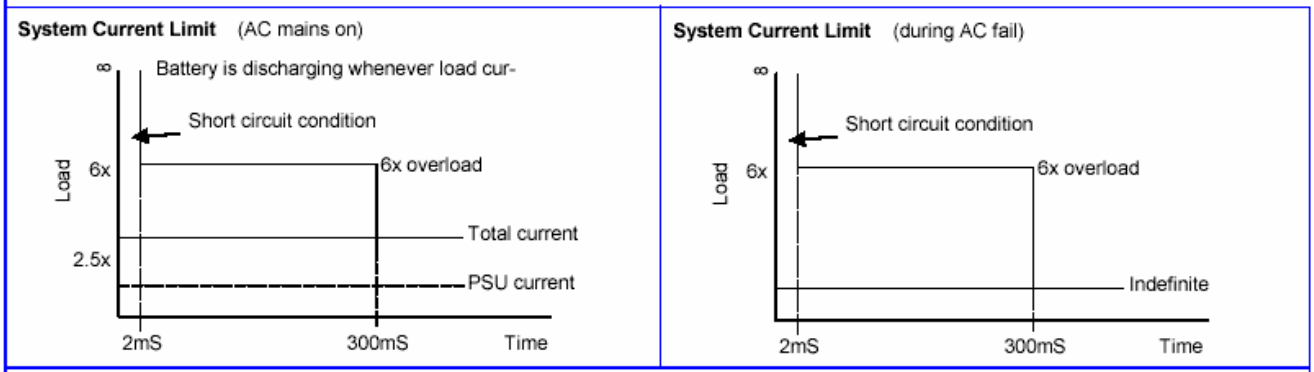


In both the above examples, the ELCB operates after 2mS under short circuit condition (battery connected).
After 300mS of sustained overload, the ELCB operates. At all times the ELCB allows 50-60% system overload.

## SMART DC UPS: BLOCK DIAGRAM

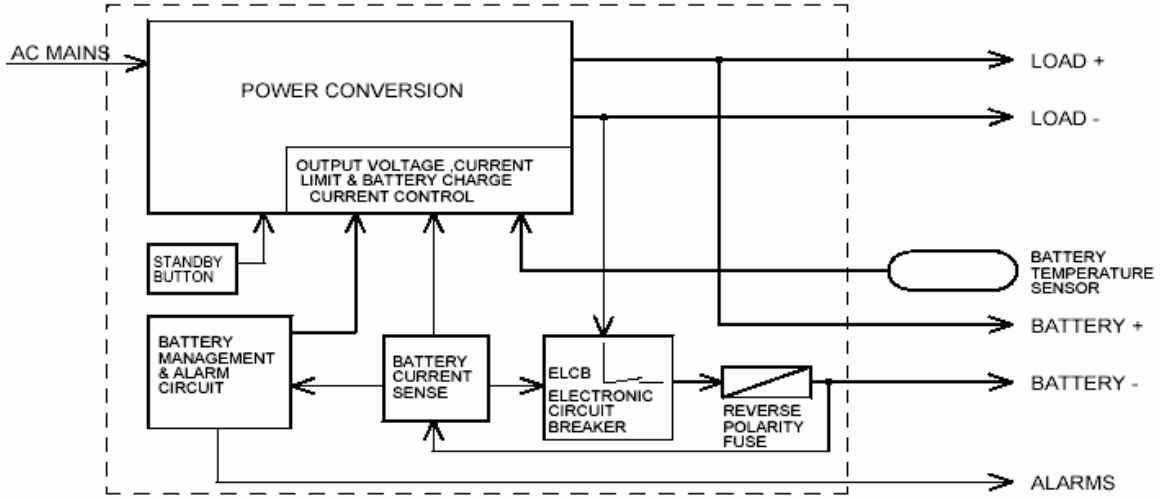


## ABOUT THE AUTOMATC BATTERY CONDITION TEST FEATURE

One of the unique features of our product is the potential to perform a regular battery health test. This intelligent feature is critical in many applications as it offers an indication of the health status of the battery. Here is how the test is done:

1. The BCT function ( if enabled) tests the condition of the battery by lowering the voltage of the power supply and allowing the battery to supply the load. If the battery terminal voltage drops below 1.92V/cell (= 46V for a 48V nominal system) within the test period time, then the BATT SYS OK alarm relay latches ( de-energized state ) and the LEDs on the front panel flash to indicate a fault condition.
2. The frequency and the duration of the BCT may be specified by the customer depending on the application, for example, this may be 1 hour every 28 days.
3. During battery condition testing the battery condition test relay changes state to indicate that the BCT is in progress.
4. Once a battery failure condition is detected the unit will immediately abort the test and revert to mains input power.
5. Once a battery failure condition is detected the LEDs continue flashing and BATT SYS OK alarm latches (de-energized state) until either both the mains power input and the battery are disconnected briefly or the system passes to the next battery condition test time.

## SMART DC UPS: SETTINGS AND VOLTAGE LEVELS

### General Specifications (at 20°C)

| Parameter | V/cell | 12V nom | 24V nom | 48V nom |
|---|---|---|---|---|
| Output (Float) Voltage | 2.3V | 13.8 | 27.6 | 55.2 |
| Battery low alarm level (Batt Sys OK*) when no mains voltage present | 1.84V | 11 | 22 | 44 |
| Battery disconnect level (ELVD) | 1.66V | 10 | 20 | 40 |

* **Note:** Refer to LED flash codes on Page 5 to see which condition has activated the Batt Sys OK alarm

### Settings for Battery Detection

| | |
|---|---|
| Automatic / manual detection | Automatic |
| Battery detection interval time | 1 hour |
| Flash battery system LED for 10sec before battery detection test | No |
| Voltage level for battery detection alarm (Batt Sys OK*) | 2.03V/cell (12.2,24.4, 48.8 for 12,24,48V nom) |

### Settings for Battery Condition Test ( if no values are entered below then this feature is disabled)

**Microprocessor version: SFMCT- _____**

| | |
|---|---|
| Time between battery condition test | |
| Length of battery condition test | |
| Max. length of a mains fail without resetting to full test interval | 4 hours |
| Battery condition test will be aborted if mains failure during test is greater than: | 5 mins |
| Allow retest after battery condition bad | Yes (at next programmed time ) |
| Voltage level for battery condition good / bad alarm - Batt System OK* (if voltage drops to this level during BCT then the test is aborted) | 1.92V/cell (11.5, 23.0, 46.0 for 12,24,48V nom) |
| Battery condition test relay | Energised when test is in progress |

### Battery Charge Current Limit

If this has been set to a higher value than the default setting then it will be noted on a separate label on the unit.

## SMART DC UPS: CONNECTIONS

**Always connect the positive output of the charger to the positive terminal of the battery. It is essential to periodically check the electrolyte level of flooded cells as there is always some evaporation.**
**To minimize the volt drop at the output connections use all the terminals provided ie. Connect output wires in parallel.**

### Functions of Front Panel Switches

**Standby:** Turns off DC output of PSU and allows load to run off battery (alarms at 0.92 x V nom and ELVD operates at 0.88 x V nom)

**Battery System OK:** If the battery condition test function is enabled, pushing this switch (for approx. 1 sec) will manually initiate a battery condition test (if mains power and battery are present)

### Initial Testing with no mains power present

To close ELCB (internal electronic circuit breaker) with no ac power present, briefly short together the **BAT –ve** and **LOAD –ve** terminals.

### Layout of alarm & battery condition test relay connections

Note that relays are **energised** when: Battery condition test is on, DC output is present, Battery System OK

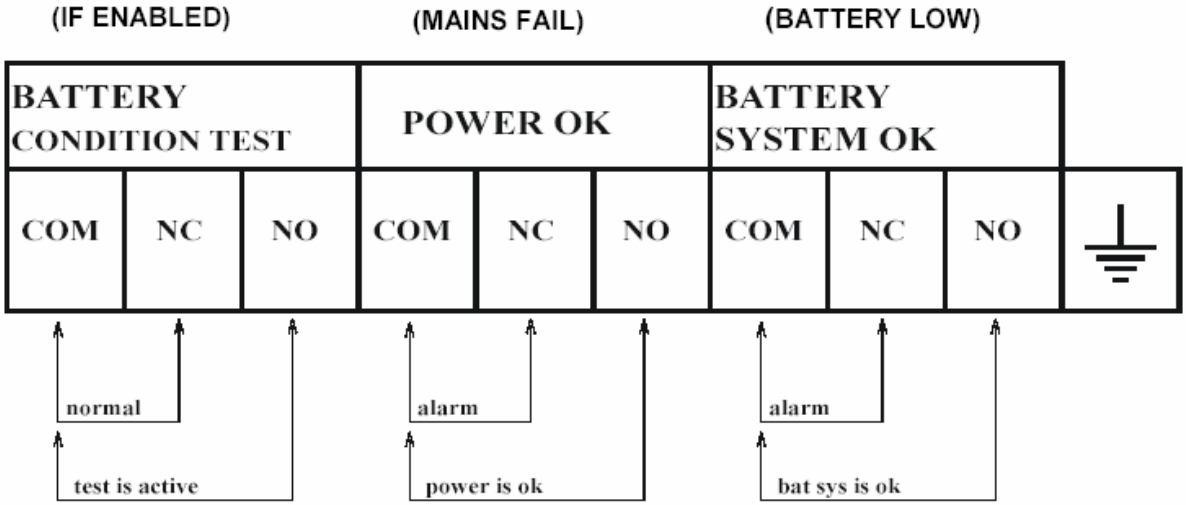


**NOTES:** **1.** POWER OK alarm has 30 second delay before activation upon mains failure.
**2.** POWER OK alarm is also activated when the PSU is in STANDBY mode.

### Fuse Ratings

The battery fuse and wiring should be rated at 1.5 x the rated PSU current.
The complete system is capable of delivering 2.5 x rated PSU current to the load and all load cabling should be rated for this current unless fused otherwise.

## MECHANICAL DRAWINGS Chassis Mount SR500 , SR750

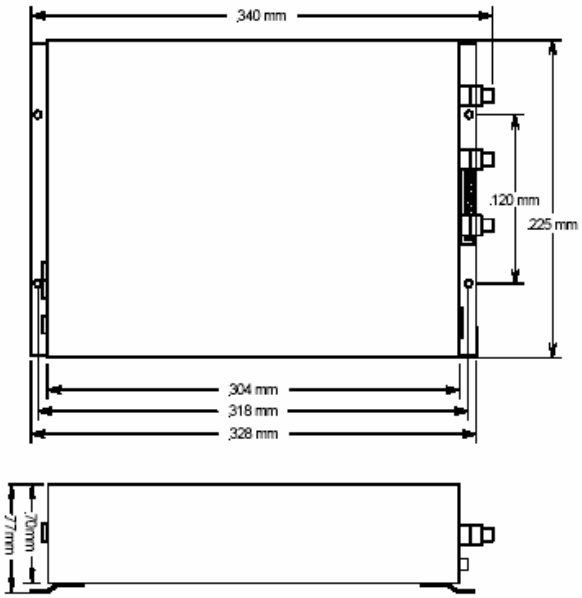


**Dims:** 328 x 225 x 70 mm
**Weight:** 4.3 Kg

Picture of SR500U , chassis mount with temperature probe option , stud terminals for output

## MECHANICAL DRAWINGS Chassis Mount SR250

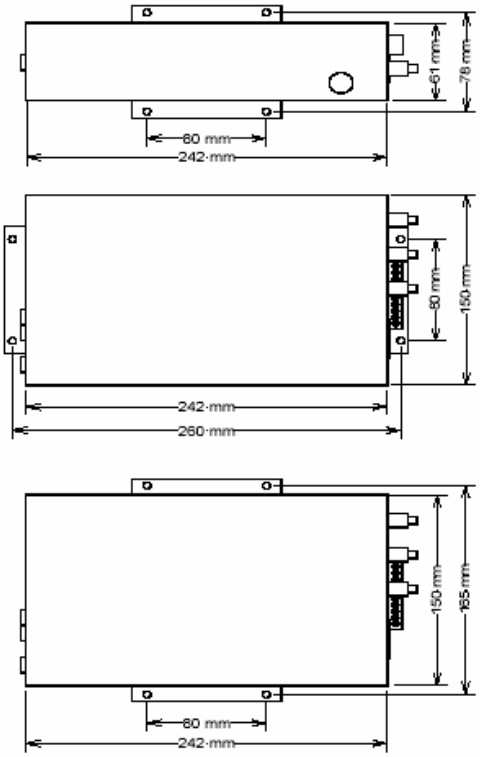


**Dims:** 260 x 150 x 61 mm

**Weight:** 1.7 Kg

## MECHANICAL DRAWINGS 19" Rack Mount 2RU , 3RU , SR250 SR500 SR750

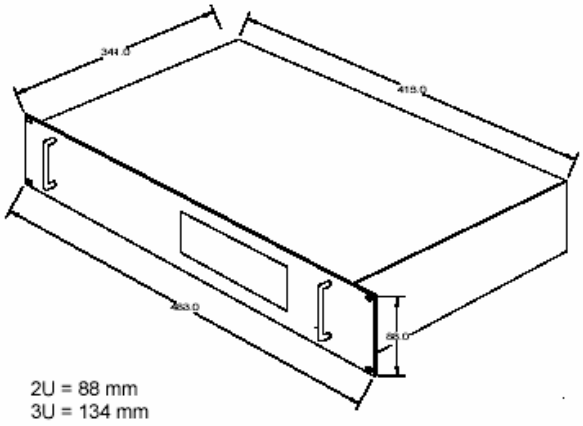


2U = 88 mm
3U = 134 mm

Picture of front view of a 19" 2RU rack mount unit with the digital voltage and current meter option

Picture of front view of a 19" 3RU rack mount unit with the digital voltage and current meter option